字符液晶显示模块

CYW-B0801A

技术手册

■ SCOPE

This specification is applied to the liquid crystal display module CYW0801A with 1/8 duty.

■ FEATURES

●Module:1 Lines x 8 characters (5 x 8 Dots)

●Glass Type: STN Yellow/Green

●Display Mode: Positive

●Viewing Direction: 6 O'clock

●Polarizer Mode: Transflective

●Driving Method: 1/8 Duty , 1/4 Bias

●Dot Size:

●Dot Pitch:

■ MECHANICAL CHARACTERISTICS

Item	Description	Unit
Outline Dimension	80(L) x 36(W) x 13.6(H)	mm
Viewing area	61.0(L) x 15.8(W)	mm

■SYSTEM BLOCK DIAGRAM

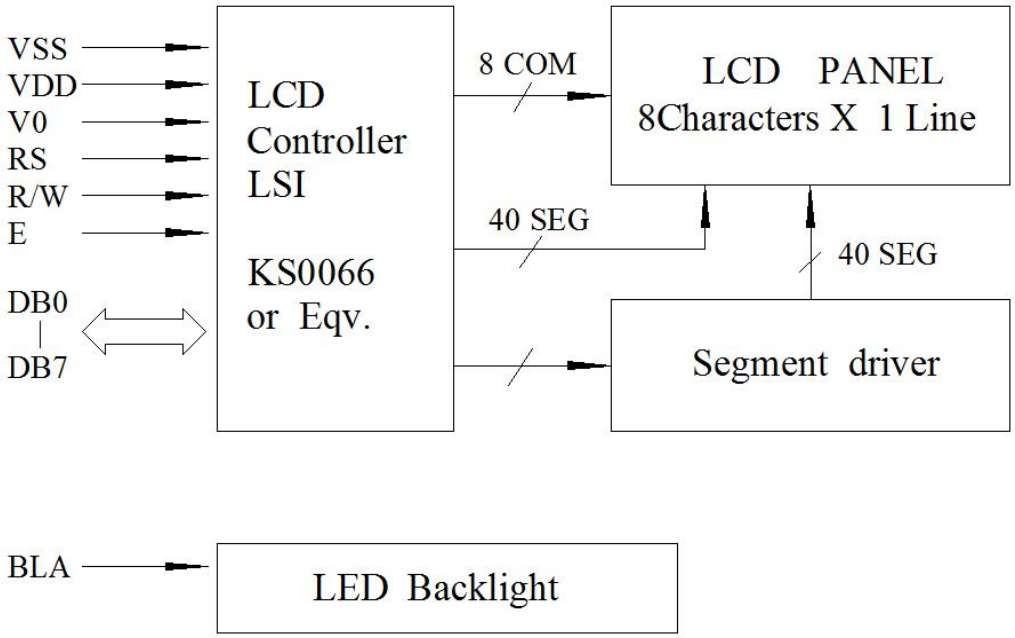

■ Absolute Maximum Ratings

Item	Symbol	Min.	Max.	Unit
Power Supply for Logic	Vdd	-0.3	+7.0	V
Power supply for LCD Drive	Vlcd	Vdd-12	Vdd+0.3	V
Input Voltage	Vi	-0.3	Vdd+0.3	V
Operating Temperature	Ta	-20	+70	℃
Storage Temperature	Tstg	-30	+80	℃

■ Electrical Characteristics(Ta==25℃;Vdd=5.0V±5%,otherwise specified)

Item	Symbol	Test Condition	Min.	Typ.	Max.	Unit
Power Supply for Logic	Vdd	--	2.7	5.0	5.5	V
Operating Voltage for LCD	Vdd-Vo	--	--	4.8	--	V
Input “high” voltage	Vih	--	2.2	--	Vdd	V
Input “low” voltage	Vil	--	-0.3	--	0.6	V
Output “high” voltage	Voh	-Ioh=0.2mA	2.4	--	--	V
Output “low” voltage	Vol	Iol=1.2mA	--	--	0.4	V
Power supply current	Idd	Vdd=5.0v	--	2.0	4.0	mA

■ PIN ASSIGNMENT

No.	Symbol	Level	Function	
1	Vss	--	0V	Power Supply
2	Vdd	--	+5.0V	
3	V0	--	for LCD	
4	RS	H/L	Register Select: H—Data, L--Instruction	
5	R/W	H/L	H--Read L--Write	
6	E	H,H-L	Enable Signal	
7	DB0	H/L	Data bus used in 8 bit transfer	
8	DB1	H/L		
9	DB2	H/L		
10	DB3	H/L		
11	DB4	H/L	Data bus for both 4 and 8 bit transfer	
12	DB5	H/L		
13	DB6	H/L		
14	DB7	H/L		
15	A	--	Led Back-light(+)	

■ AC Characteristics and Input Timing Characteristics

AC characteristics (Vdd=5V±10%,Vss=0V Ta=25℃)

Write Mode

Characteristics	Symbol	Limit			Unit	Test Condition
		Min	Typ	Max		
E Cycle Time	t_C	400	-	-	ns	Pin E
E Pulse Width	t_{PW}	150	-	-	ns	Pin E
E Rise/Fall Time	t_R, t_F	-	-	25	ns	Pin E
Address Setup Time	t_{SP1}	30	-	-	ns	Pins: RS, R/W,E
Address Hold Time	t_{HD1}	10	-	-	ns	Pins: RS, R/W,E
Data Setup Time	t_{SP2}	40	-	-	ns	Pins: DB7 - DB0
Data Hold Time	t_{HD2}	10	-	-	ns	Pins: DB7 - DB0

Read Mode

Characteristics	Symbol	Limit			Unit	Test Condition
		Min	Typ	Max		
E Cycle Time	t_C	400	-	-	ns	Pin E
E Pulse Width	t_W	150	-	-	ns	Pin E
E Rise/Fall Time	t_R, t_F	-	-	25	ns	Pin E
Address Setup Time	t_{SP1}	30	-	-	ns	Pins: RS, R/W,E
Address Hold Time	t_{HD1}	10	-	-	ns	Pins: RS, R/W,E
Data Output Delay Time	t_D	-	-	100	ns	Pins: DB7 - DB0
Data hold time	t_{HD2}	20	-	-	ns	Pin DB7 - DB0

Write Mode Timing Diagram

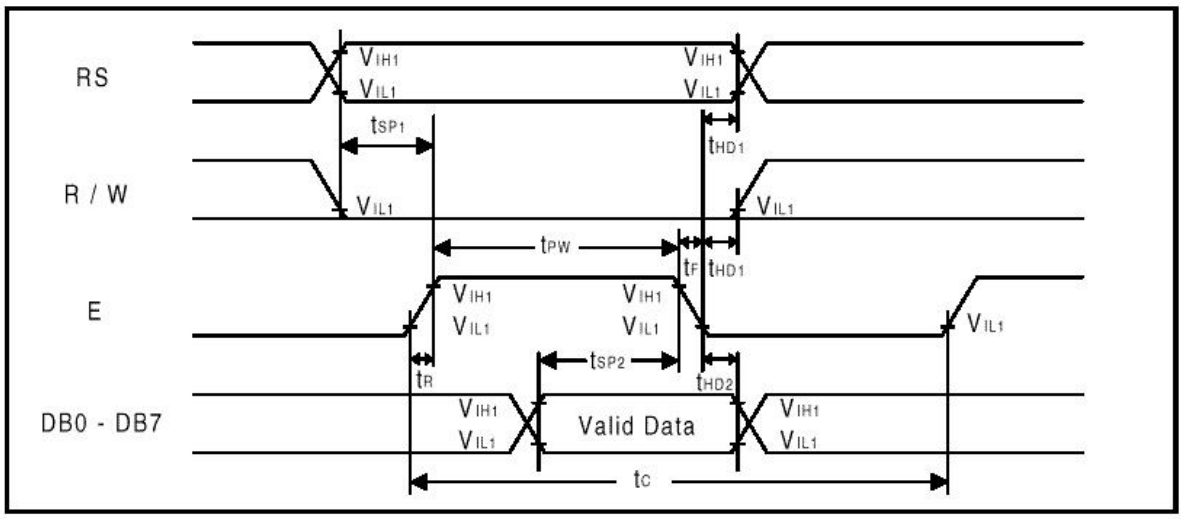

Code	0	0	0	0	0	0	1	D	C	B

D = 1: Display on, D = 0: Display off

C = 1: Cursor on . C = 0: Cursor off

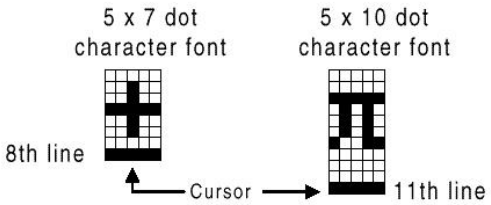

Read Mode Timing Diagram

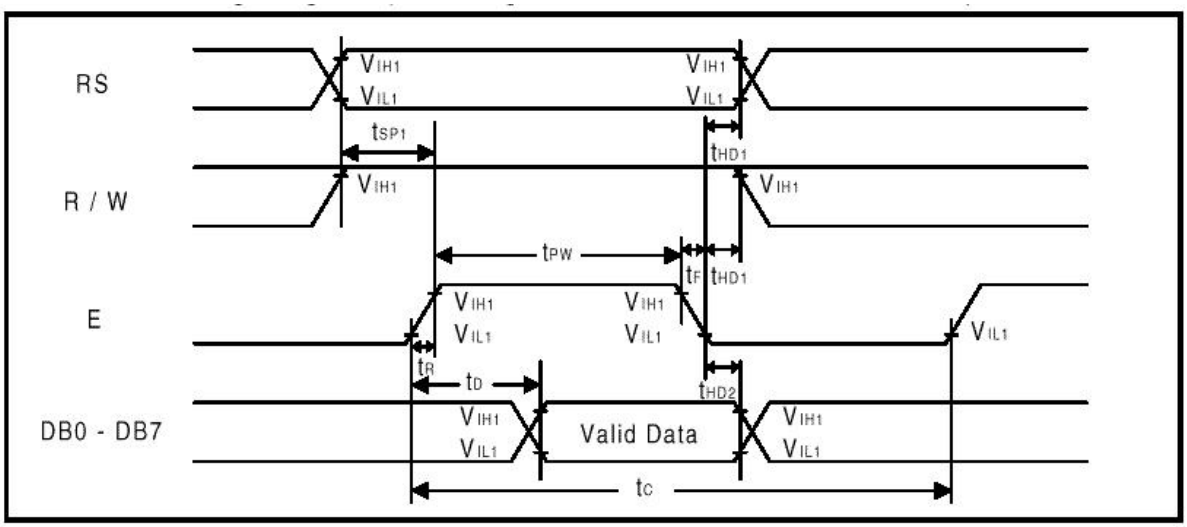

■CONTROL and DISPLAY COMMAND

Control and display instructions will show in details as following:

1. Clear Display

	RS	R/W	DB7	DB6	DB5	DB4	DB3	DB2	DB1	DB0
Code	0	0	0	0	0	0	0	0	0	1

It clears the whole display and sets display data RAM's address 0 in address counter.

2. Return Home

	RS	R/W	DB7	DB6	DB5	DB4	DB3	DB2	DB1	DB0
Code	0	0	0	0	0	0	0	0	1	X

X: Do not care (0 or 1)

It sets display data RAM's address 0 in address counter and display returns to its original position. The cursor or blink goes to the left edge of the display (to the 1st line if 2 lines are displayed). The contents of the Display Data RAM do not change.

3. Entry Mode Set

During writing and reading data, it sets cursor move direction and shifts the display.

	RS	R/W	DB7	DB6	DB5	DB4	DB3	DB2	DB1	DB0
Code	0	0	0	0	0	0	0	1	I / D	S

I / D = 1: Increment, I / D = 0: Decrement.

S = 1: The display shift, S = 0: The display does not shift.

S = 1	I / D = 1	It shifts the display to the left
S = 1	I / D = 0	It shifts the display to the right

4. Display On/Off Control

	RS	R/W	DB7	DB6	DB5	DB4	DB3	DB2	DB1	DB0
Code	0	0	0	0	0	0	1	D	C	B

D = 1: Display on, D = 0: Display off

5 x 7 dot 5 x 10 dot

B = 1: Blinks on, B= 0: Blinks off

5. Cursor or Display Shift

Without changing DD RAM's datas, it can move cursor and shift display.

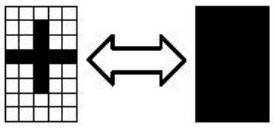

Blink display alternately

	RS	R/W	DB7	DB6	DB5	DB4	DB3	DB2	DB1	DB0
Code	0	0	0	0	0	1	S/C	R/L	X	X

S/C	R/L	Description	Address Counter
0	0	Shift cursor to the left	AC = AC - 1
0	1	Shift cursor to the right	AC = AC + 1
1	0	Shift display to the left. Cursor follows the display shift	AC = AC
1	1	Shift display to the right. Cursor follows the display shift	AC = AC

6. Function Set

	RS	R/W	DB7	DB6	DB5	DB4	DB3	DB2	DB1	DB0
Code	0	0	0	0	1	DL	N	F	X	X

X: Do not care (0 or 1)

DL: It sets interface data length.

DL = 1: Datas are transferred with 8-bit lengths (DB7 - DB0).

DL = 0: Datas are transferred with 4-bit lengths (DB7 - DB4).

(It needs two times to transfer datas)

N: It sets the number of the display line.

N = 0: One-line display.

N = 1: Two-line display.

F: It sets the character font.

F = 0: 5 x 7 dots character font.

F = 1: 5 x 10 dots character font.

N	F	No. of Display Lines	Character Font	Duty Factor
0	0	1	5 X 7 dots	1 / 8
0	1	1	5 x 10 dots	1 / 11
1	X	2	5 x 7 dots	1 / 16

It cannot display two lines with 5 x 10 dot character font.

7. Set Character Generator RAM Address

	RS	R/W	DB7	DB6	DB5	DB4	DB3	DB2	DB1	DB0
Code	0	0	0	1	a	a	a	a	a	a

It sets character generator RAM address $(aaaaaa)_2$ to the address counter.
Character generator RAM data can read or write after this setting.

8. Set Display Data RAM Address

	RS	R/W	DB7	DB6	DB5	DB4	DB3	DB2	DB1	DB0
Code	0	0	1	a	a	a	a	a	a	a

It sets display data RAM address $(aaaaaaa)_2$ to the address counter.
Display data RAM can read or write after this setting.
In one-line display (N = 0), $(aaaaaaa)_{2:}$ $(00)_{16}$ - $(4F)_{16}$.
In two-line display (N = 1), $(aaaaaaa)_{2:}$ $(00)_{16}$ - $(27)_{16}$ for the first line,
$(aaaaaaa)_{2:}$ $(40)_{16}$ - $(67)_{16}$ for the second line.

9. Read Busy Flag and Address

	RS	R/W	DB7	DB6	DB5	DB4	DB3	DB2	DB1	DB0
Code	0	1	BF	a	a	a	a	a	a	a

When (BF = 1) indicates that the system is busy now, it will not accept any instruction until no busy (BF = 0). At the same time, the address counter ccontents's $(aaaaaaa)_2$ is read out.

10. Write Data to Character Generator RAM or Display Data RAM

	RS	R/W	DB7	DB6	DB5	DB4	DB3	DB2	DB1	DB0
Code	1	0	d	d	d	d	d	d	d	d

It writes data $(dddddddd)_2$ to character generator RAM or display data RAM.

11. Read Data from Character Generator RAM or Display Data RAM

	RS	R/W	DB7	DB6	DB5	DB4	DB3	DB2	DB1	DB0
Code	1	1	d	d	d	d	d	d	d	d

It reads data $(dddddddd)_2$ from character generator RAM or display data RAM.
To get the correct data readout is shown belows:
(i) Set the address of the character generator RAM or display data RAM or shift the cursor instruction.
(ii) Send the " Read " instruction.
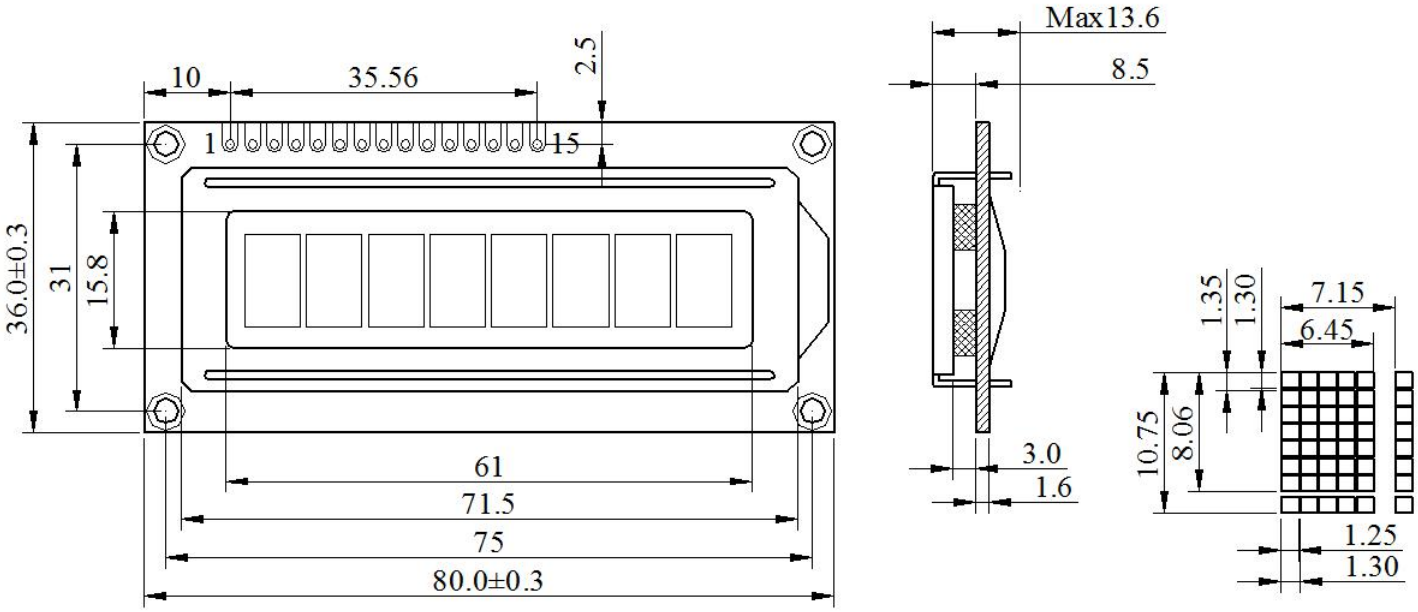
■ ASSEMBLY DRAWING