由 Autodesk 教育版产品制作

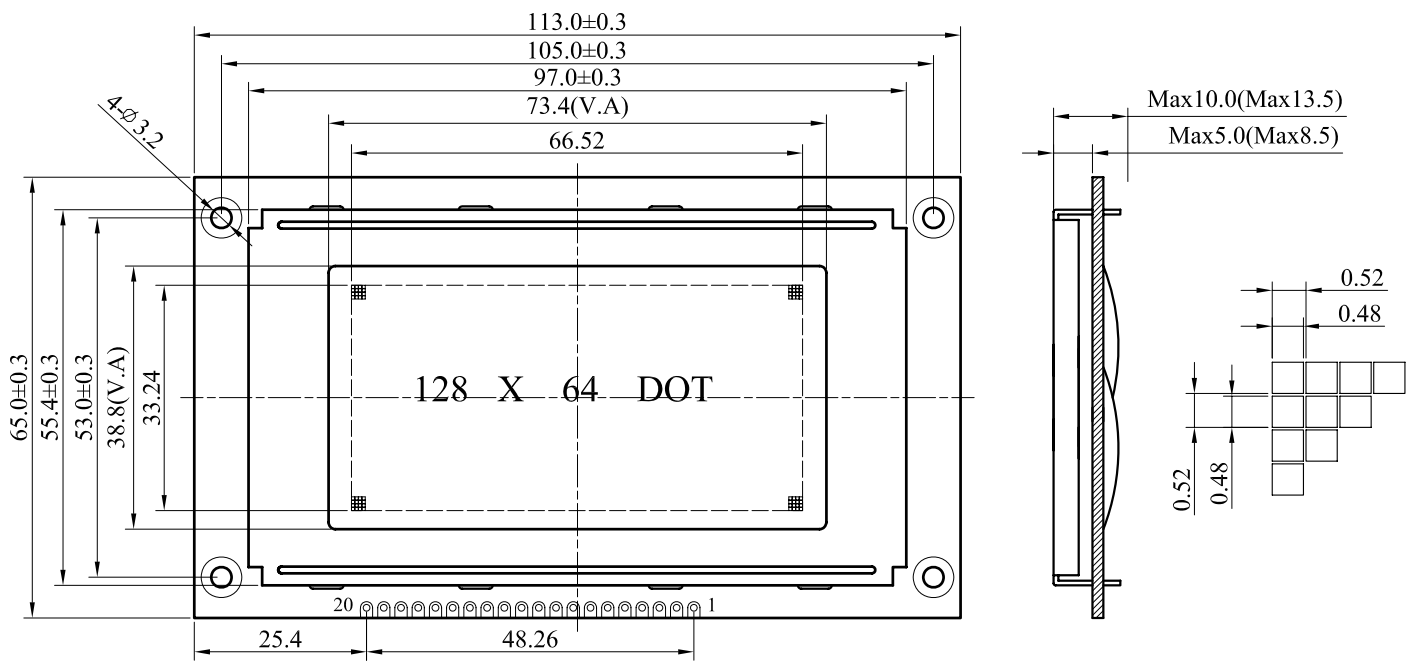

ABSOLUTE MAXIMUM RATINGS

Item	Symbol	Min.	Max.	Unit
Supply Voltage(Logic)	Vdd - Vss	-0.3	7.0	V
Supply Voltage(LCD)	Vdd - V0	-0.3	25.0	V
Input Voltage	Vi	-0.3	Vdd + 0.3	V
Operating Temp.	Topr	-20	70	℃
Storage Temp.	Tstg	-30	80	℃

MECHANICAL DATA

Item	Max.	Unit
Module Size (W X H X T)	113.0 X 65.0 X 10.0/13.5	mm
Viewing Area(W X H)	73.4 X 38.8	mm
Dot Pitch(W X H)	0.508 X 0.508	mm
Dot Size(W X H)	0.458 X 0.458	mm
View Angle	6 or 12 O'Clock	

ELECTRICAL CHARACTERISTICS (Vdd=5V±0.25V)

Item	Symbol	Test Condition	Min.	Typ.	Max.	Unit
Input High Voltage	Vih	--	2.0	--	Vdd	V
Input Low Voltage	Vil	--	-0.3	--	0.8	V
Output High Voltage	Voh	Ioh=-0.2mA	2.4	--	Vdd	V
Output Low Voltage	Vol	Iol=-1.6mA	0	--	0.4	V
Supply Current	Idd	Vdd=5.0V	--	6.0	8.0	mA
LCD Driving Voltage	Vdd - V0	Ta=25 ℃	--	11.3	--	V

PIN CONNECTIONS

Pin	Symbol	Level	Function
1	VSS	0V	Power GND
2	VDD	+5V	Power supply for logic
3	V0	--	Operation voltage for LCD
4	RS	H/L	H:Data L:Instruction code
5	R/W	H/L	H:Read L:Write
6	E	H/L	Enable signal
7	DB0	H/L	Data bus line
8	DB1	H/L	
9	DB2	H/L	
10	DB3	H/L	
11	DB4	H/L	
12	DB5	H/L	
13	DB6	H/L	
14	DB7	H/L	
15	CSA	H	Chip selection for IC1,active"H"
16	CSB	H	Chip selection for IC2,active"H"
17	RST	L	Reset signal, active"L"
18	VEE	-5V	Output voltage for LCD driving
19	BLA	+5V	Power supply for LED backlight
20	BLK	0V	

BLOCK DIAGRAM

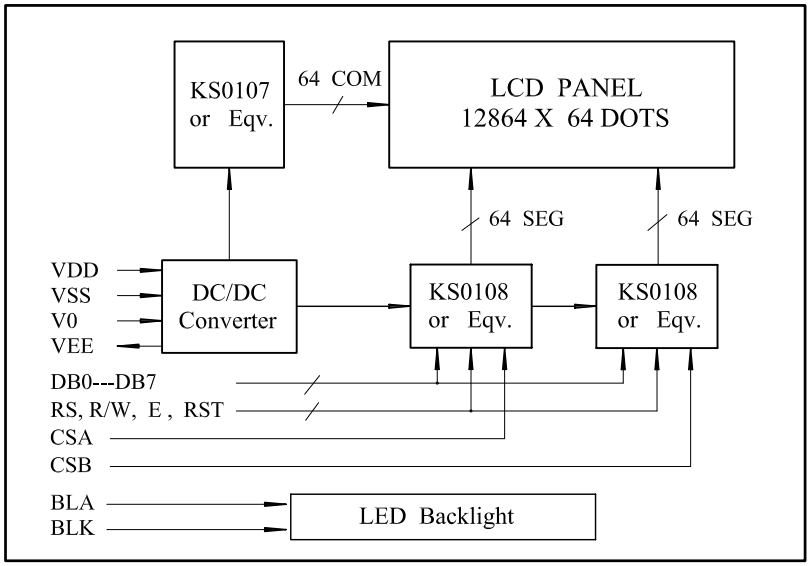

LCD Type

LCD Color	Blacklight
Yellow Green	LED/Yellow-green/5V
Gray	LED/Yellow-green/5V
Blue	LED/ White /3.2V

由 Autodesk 教育版产品制作

由 Autodesk 教育版产品制作

由 Autodesk 教育版产品制作